DO NOT PRINT THIS PAGE

FOLDING INSTRUCTIONS FOR QUICK ASSEMBLY GUIDE

PRINT ON **25 1/2” W x 22”** H SIZE OF PAPER

1

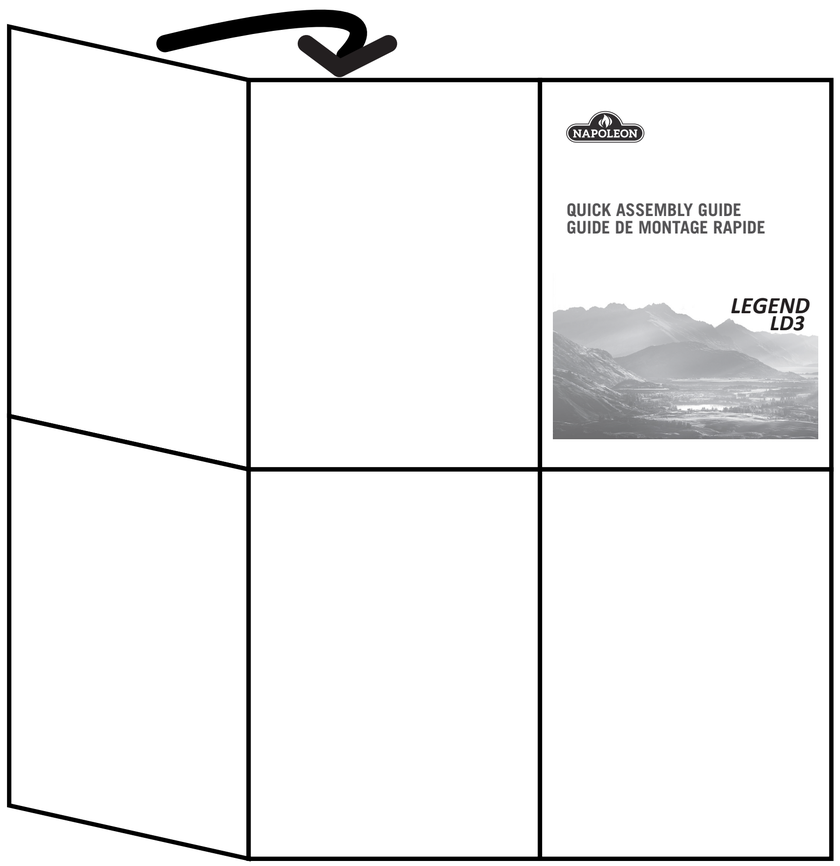

2

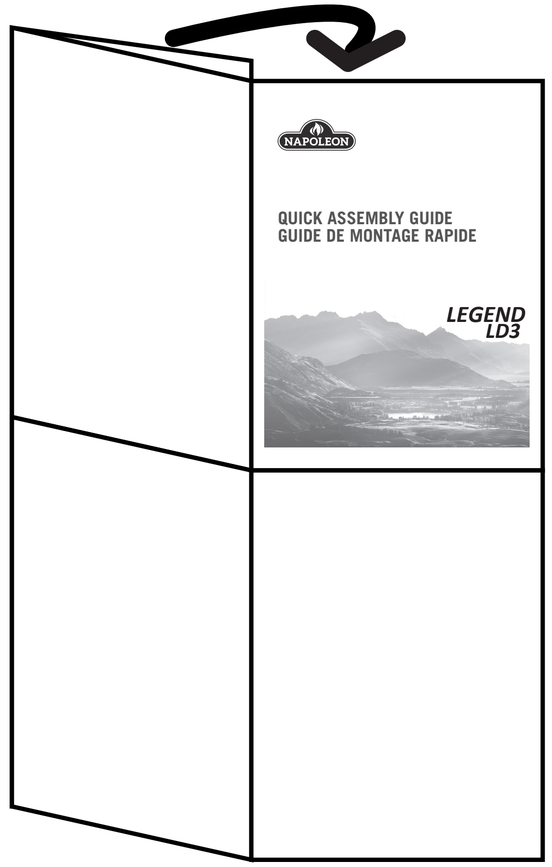

3

Please Print In BLACK and WHITE

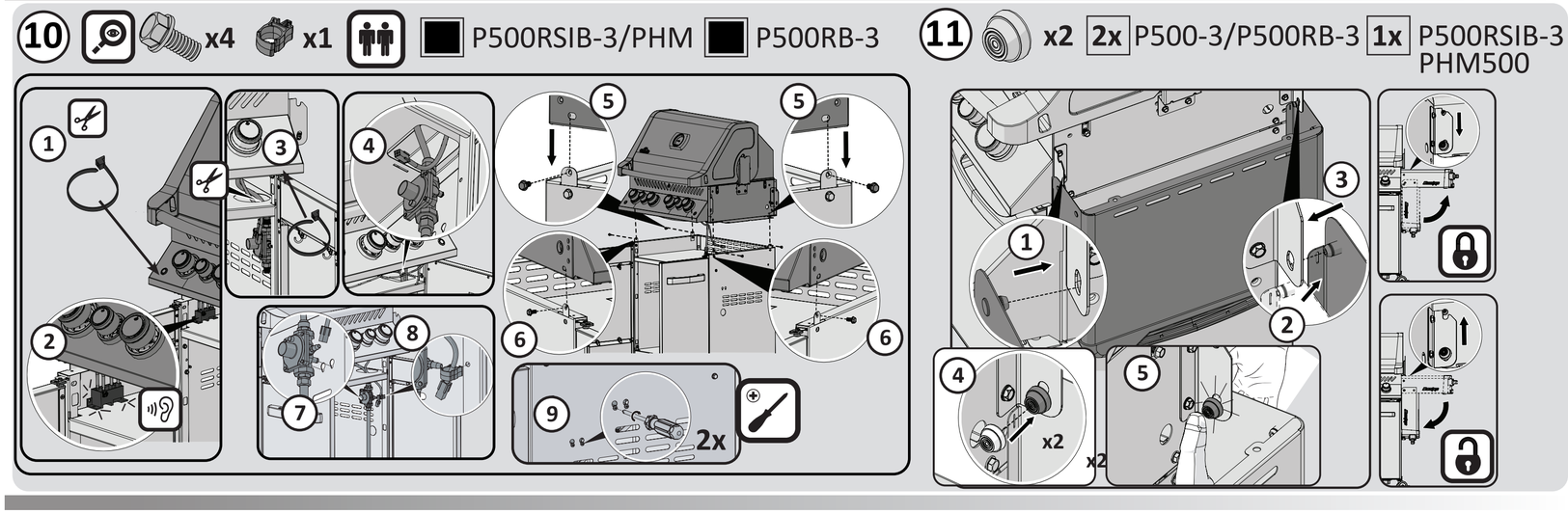

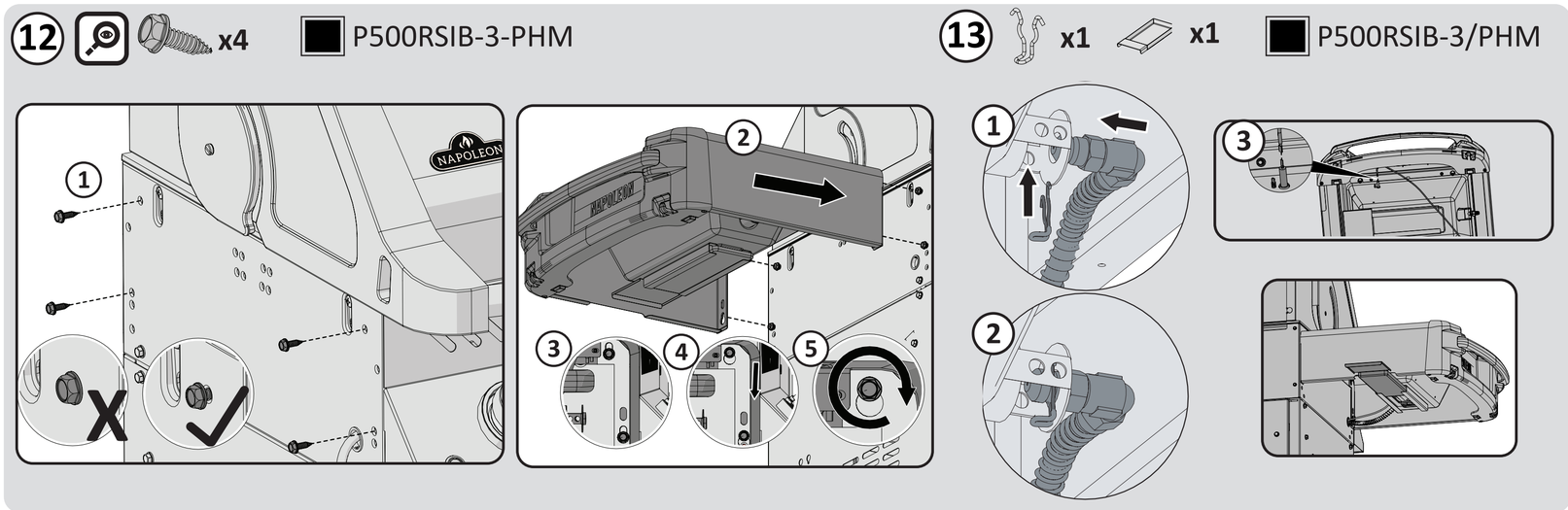

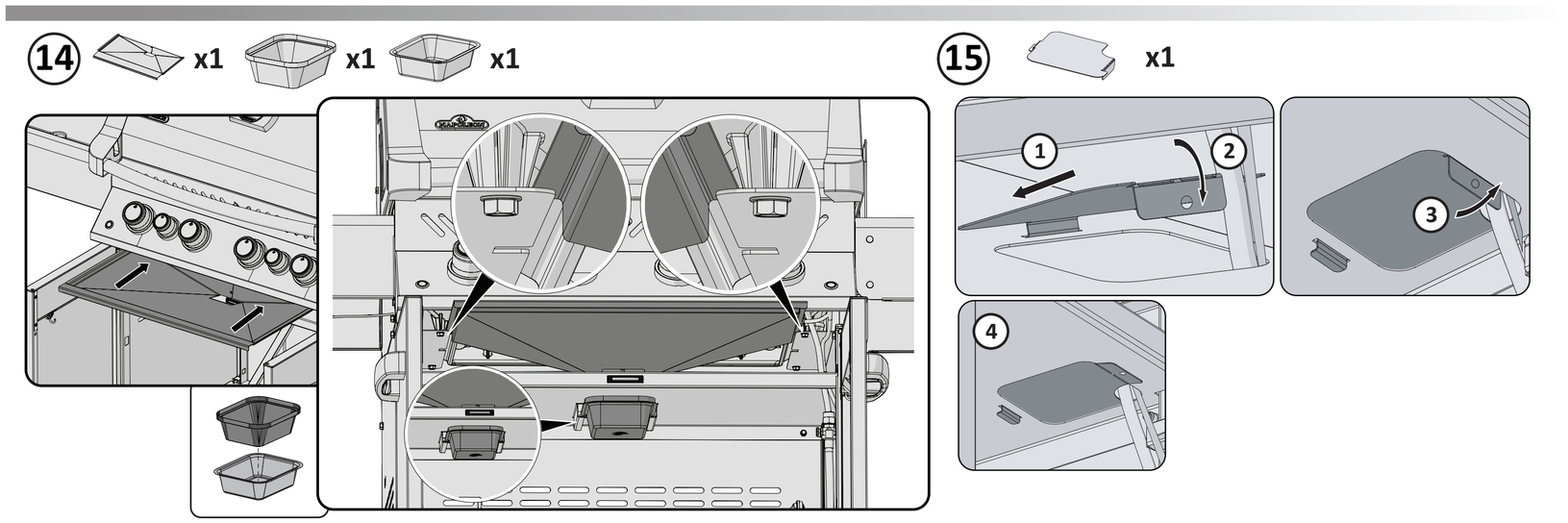

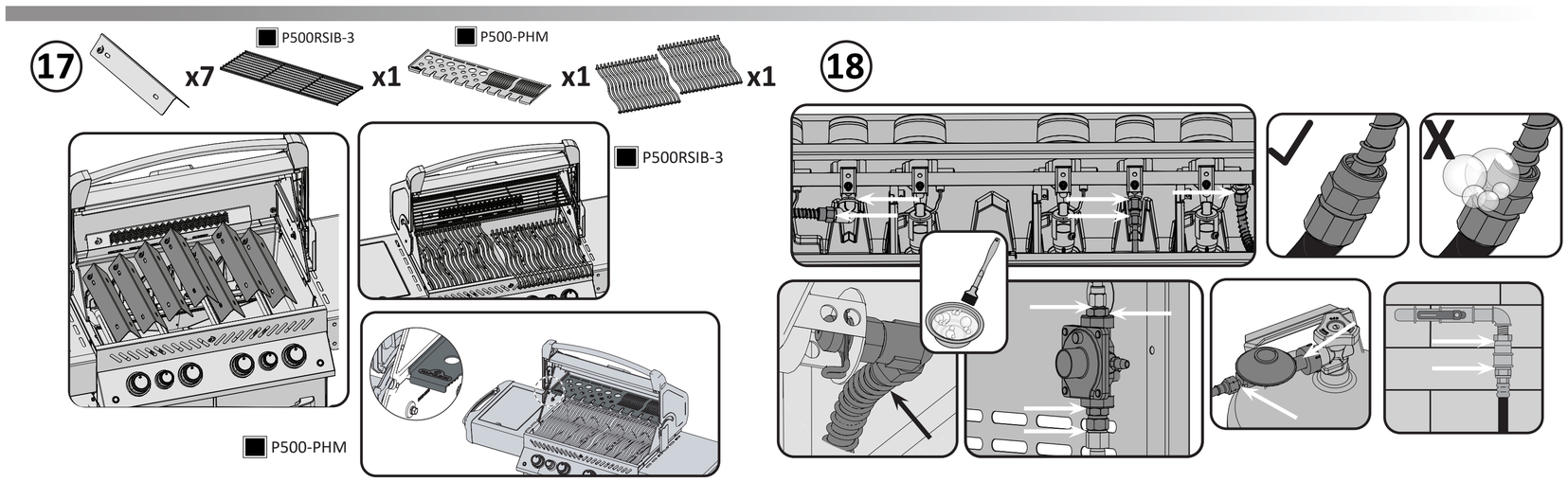

NAPOLEON

QUICK ASSEMBLY GUIDE
GUIDE DE MONTAGE RAPIDE

PRESTIGE
P500-3

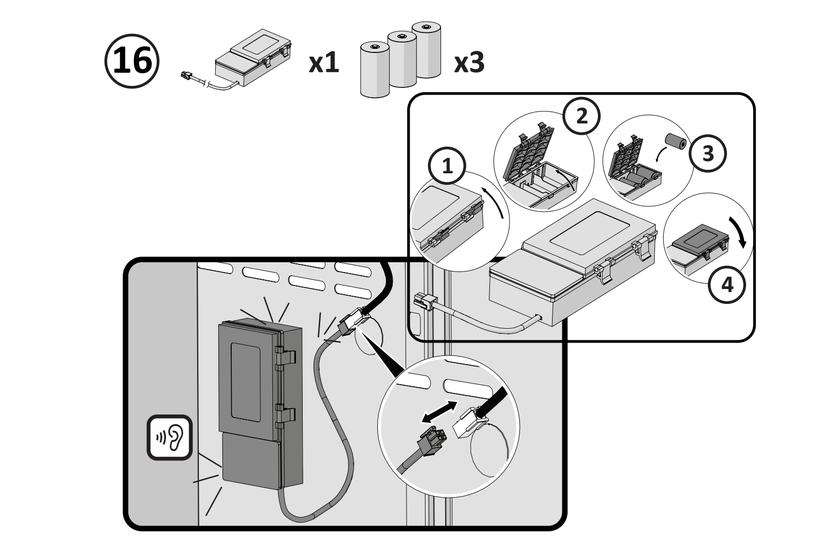

Napoleon products are protected by one or more U.S. and Canadian and/or foreign patents or patents pending.

N415-0519CE MAR24.21

Wolf Steel Europe BV
Poppenbouwing 29-31, 4191 NZ Geldermalsen,
CCI No. 51509970, THE NETHERLANDS
info@napoleongrills.nl

NAPOLEON

PRESTIGE
P500-3

TOOLS REQUIRED FOR ASSEMBLY (tools not included)
OUTILS REQUIS POUR L'ASSEMBLAGE (outils non inclus)

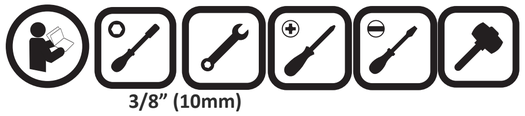

3/8" (10mm)

1

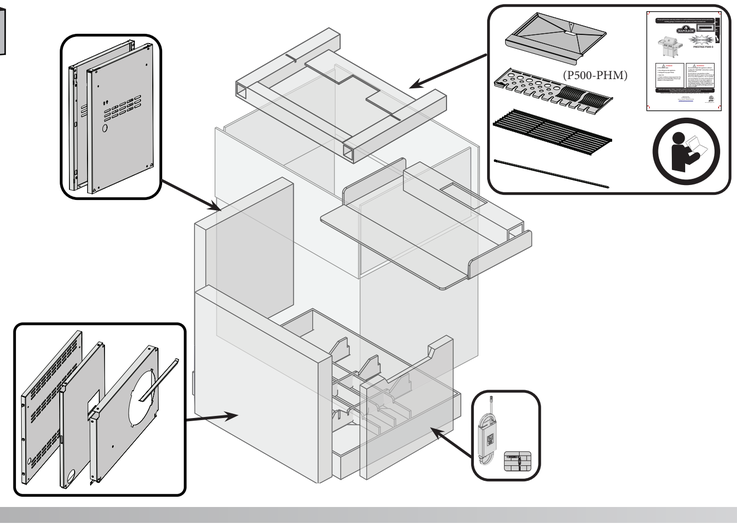

2

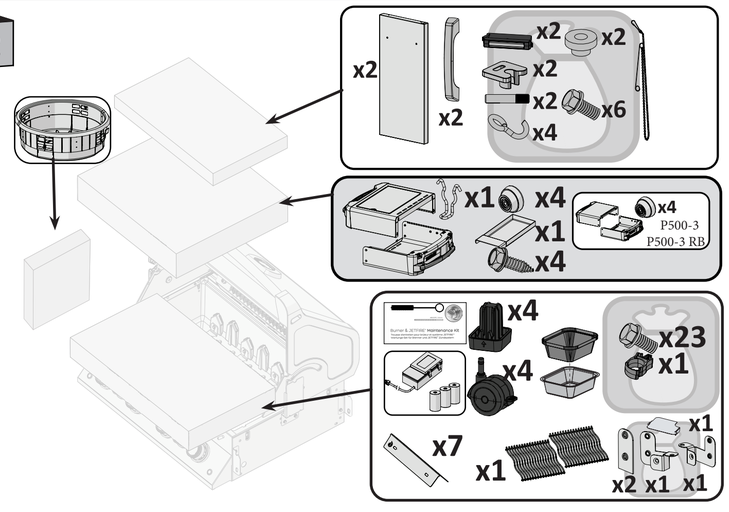

1

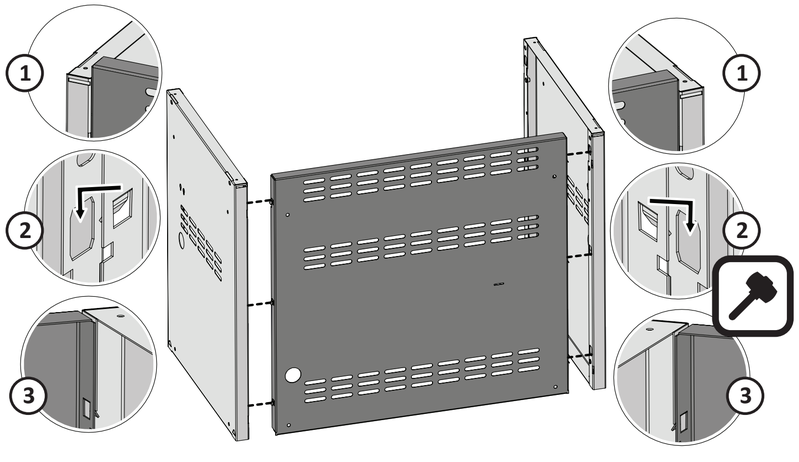

2

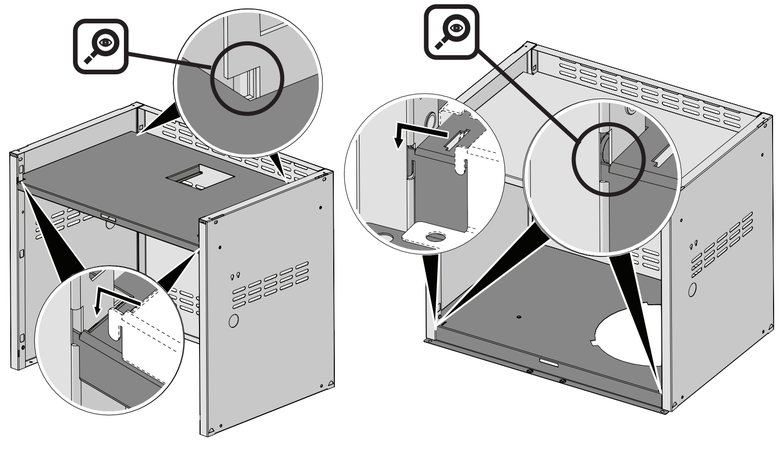

3 x12

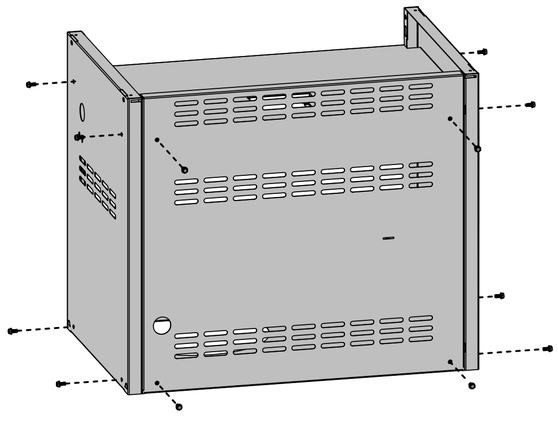

4 x4 x4

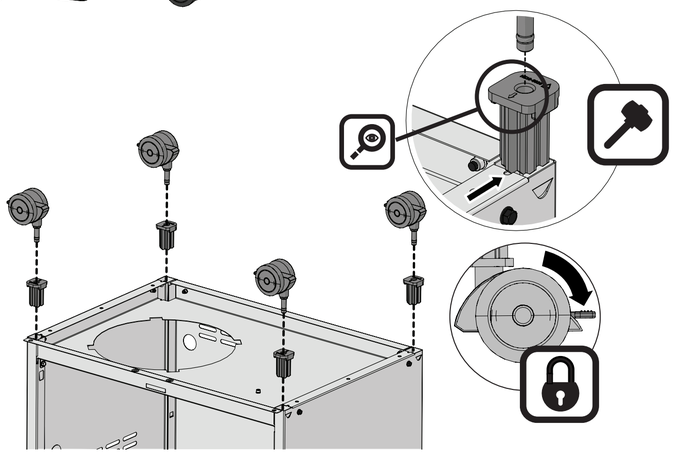

5 x1

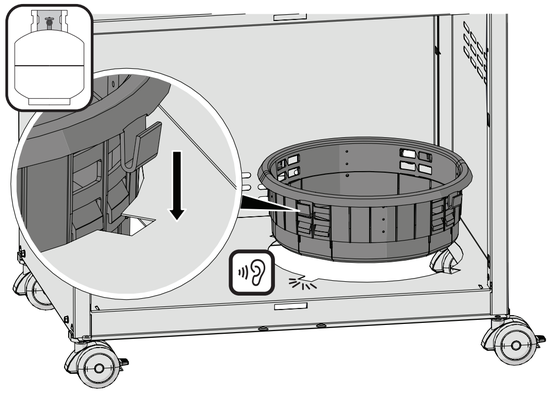

6 x1 x1

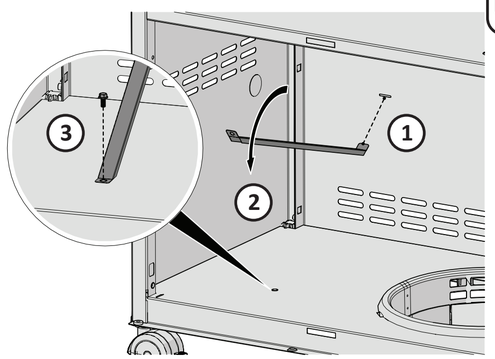

7 x1 x1 x2 x4

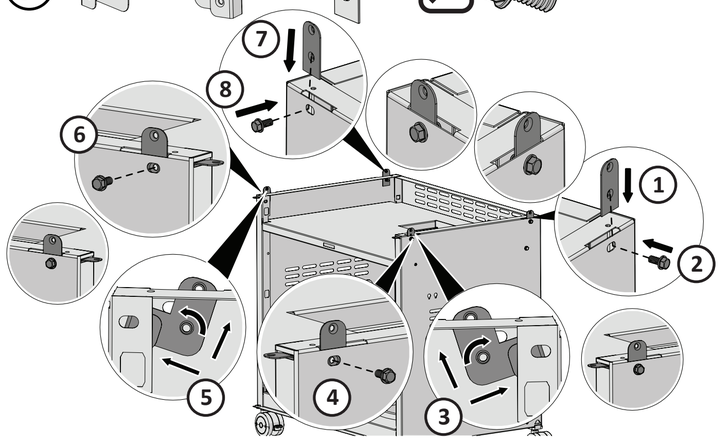

8 x4 x4 x4 x2

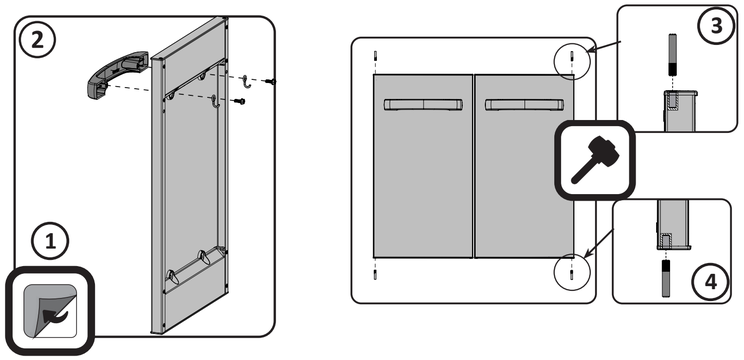
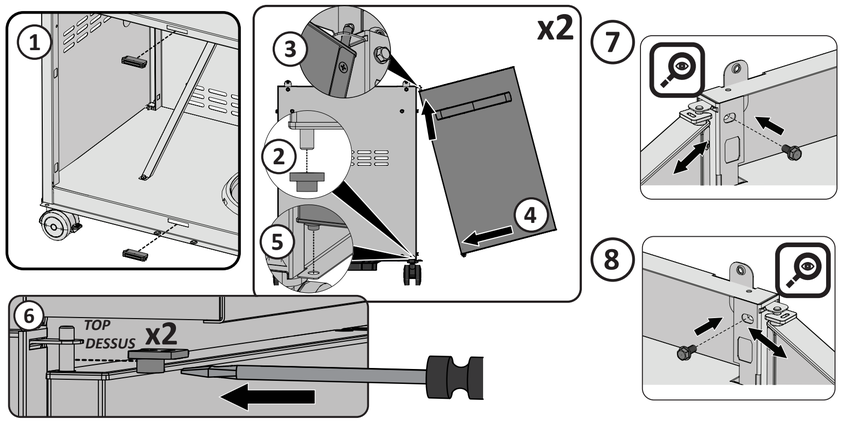
9 x2 x2 x2 x2